Quantum computing for quantum chemistry

Saad Yalouz

Laboratoire de Chimie Quantique
Université de Strasbourg

Quantum computer

$|0\rangle$

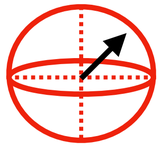

$|1\rangle$

$$|Q\rangle = c_0|0\rangle + c_1|1\rangle$$

<u>The Qubit</u> : a two-level system

From Quantum Computing to Quantum Chemistry

Quantum computer

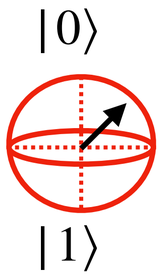

$$|Q\rangle = c_0|0\rangle + c_1|1\rangle$$

<u>The Qubit</u> : a two-level system

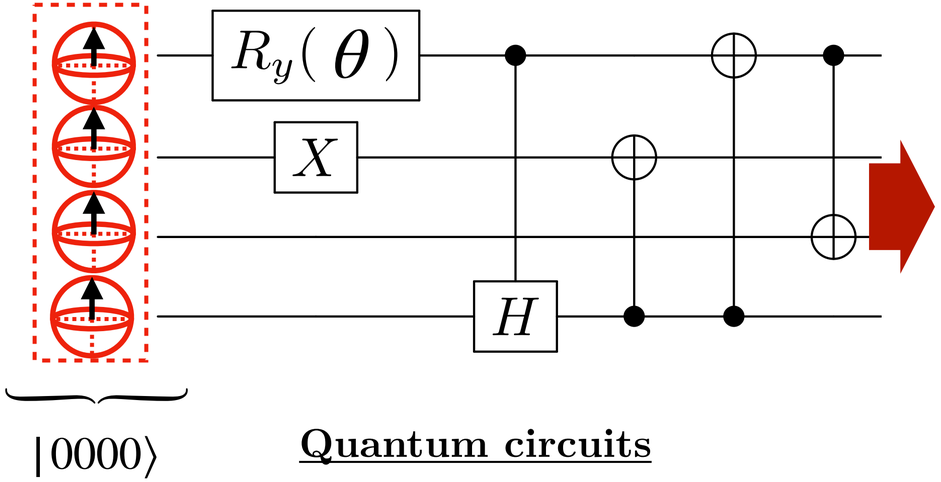

<u>Quantum circuits</u>

From Quantum Computing to Quantum Chemistry

Quantum computer

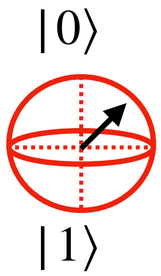

$$|Q\rangle = c_0|0\rangle + c_1|1\rangle$$

The Qubit : a two-level system

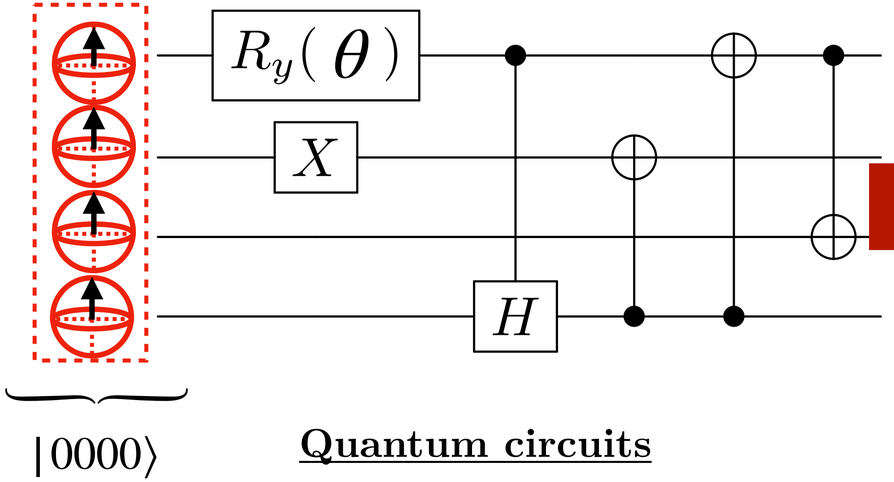

Quantum circuits

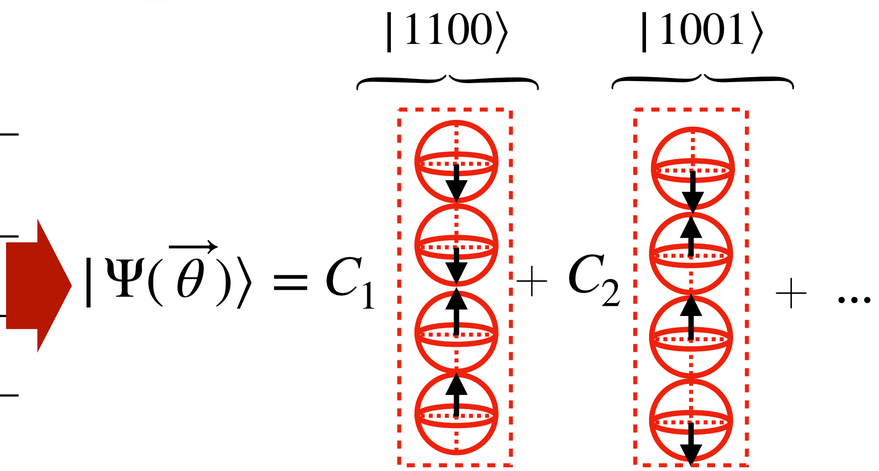

From Quantum Computing to Quantum Chemistry

Quantum computer

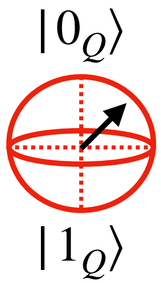

$$|Q\rangle = c_0|0\rangle + c_1|1\rangle$$

The Qubit : a two-level system

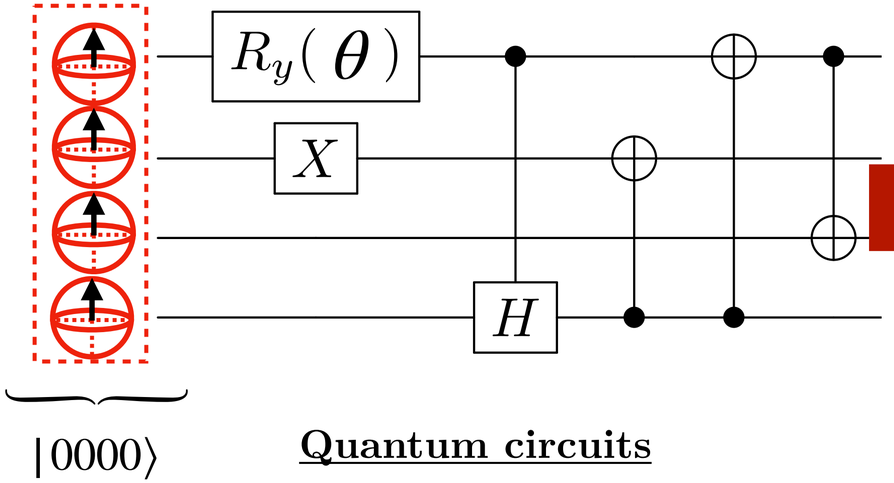

Quantum circuits

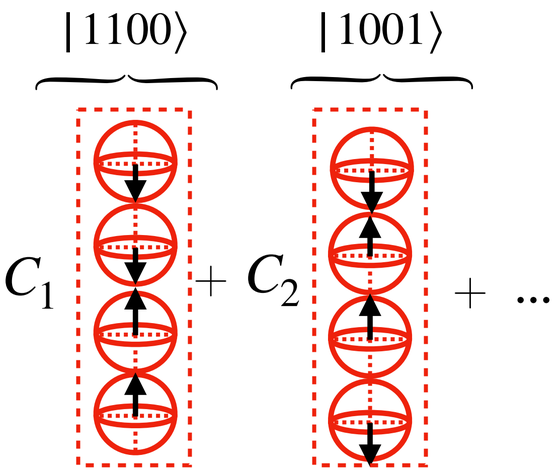

$$|\Psi(\vec{\theta})\rangle = C_1 \quad + C_2 \quad + \ldots$$

Electronic structure problem

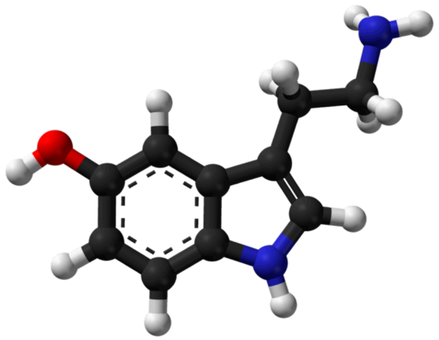

Electronic structure Hamiltonian

$$\mathscr{H} = \sum_{p,q} h_{pq} a_p^\dagger a_q + \frac{1}{2} \sum_{p,q,r,s} g_{pqrs} a_p^\dagger a_r^\dagger a_s a_q$$

$$\longrightarrow \mathscr{H}|\Psi_0\rangle = E_0|\Psi_0\rangle$$

$$|\Psi_0\rangle = C_1 \underbrace{\left|\quad\right\rangle}_{|1100\rangle} + C_2 \underbrace{\left|\quad\right\rangle}_{|1001\rangle} + \ldots$$

Near term quantum algorithm

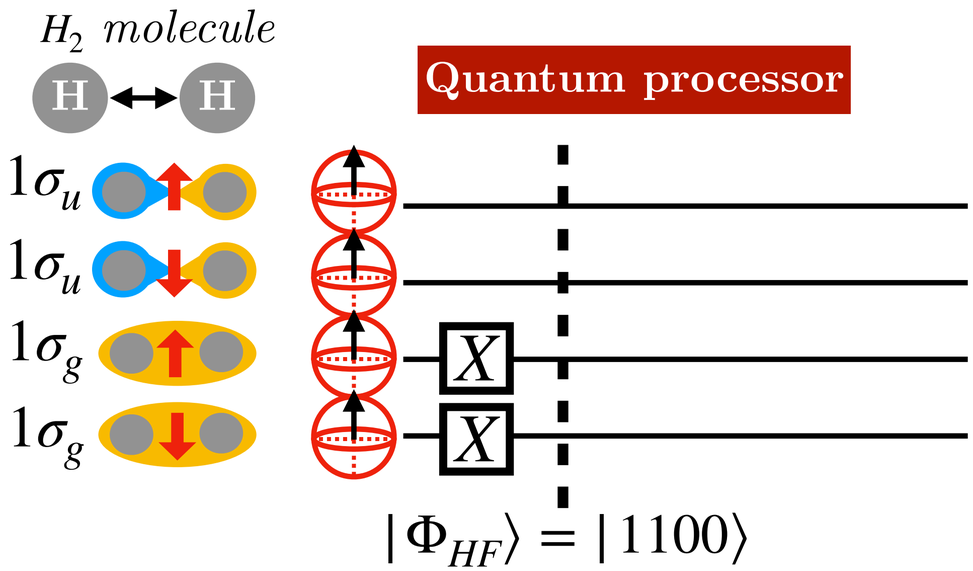

Near term quantum algorithm

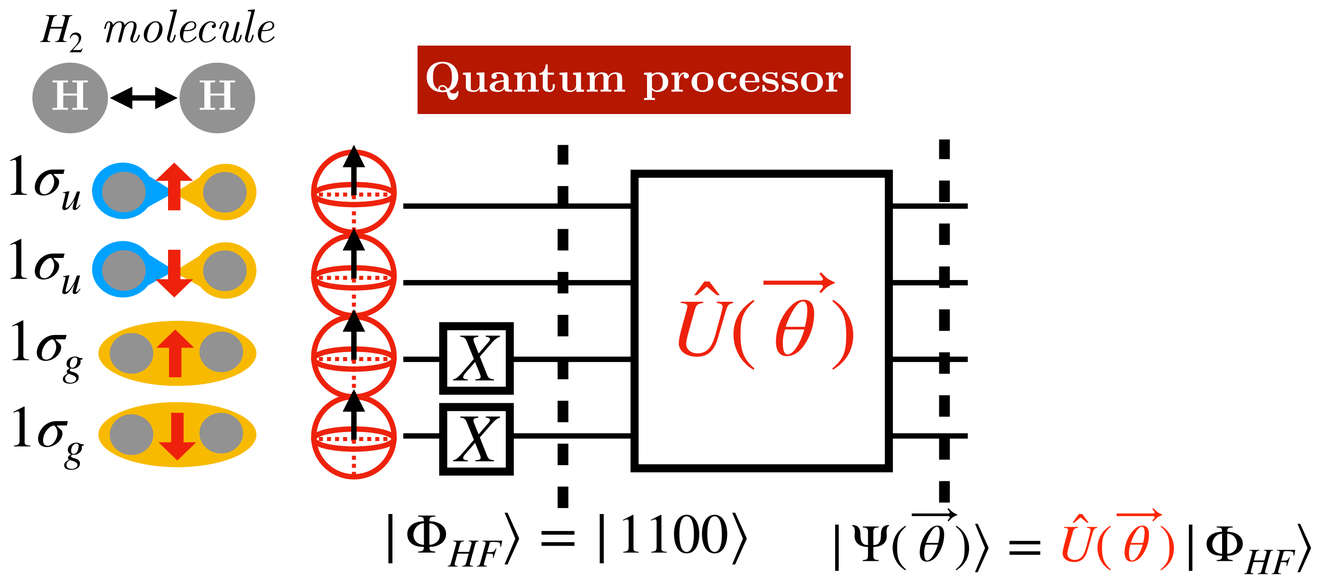

Near term quantum algorithm

VARIATIONAL QUANTUM EIGENSOLVER (VQE)

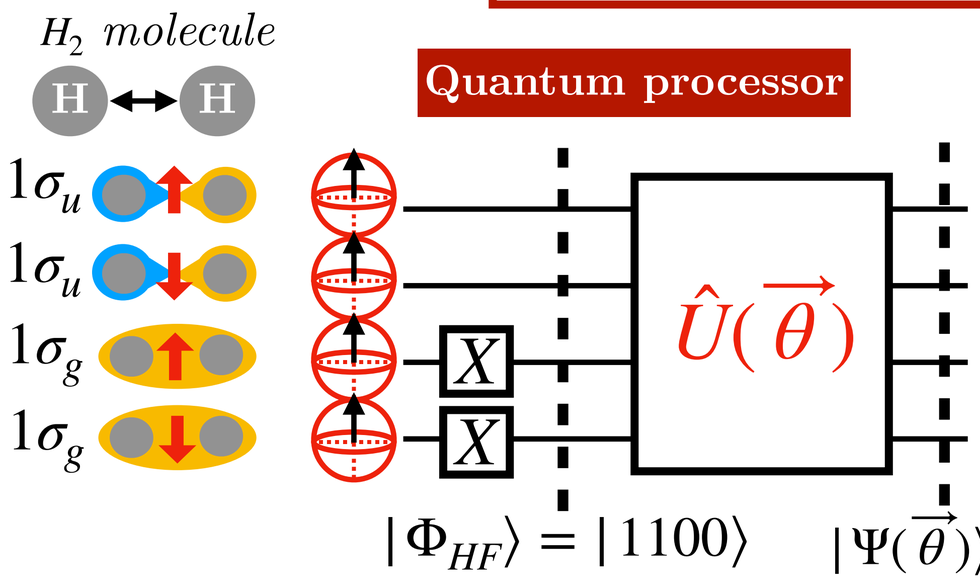

Near term quantum algorithm

VARIATIONAL QUANTUM EIGENSOLVER (VQE)

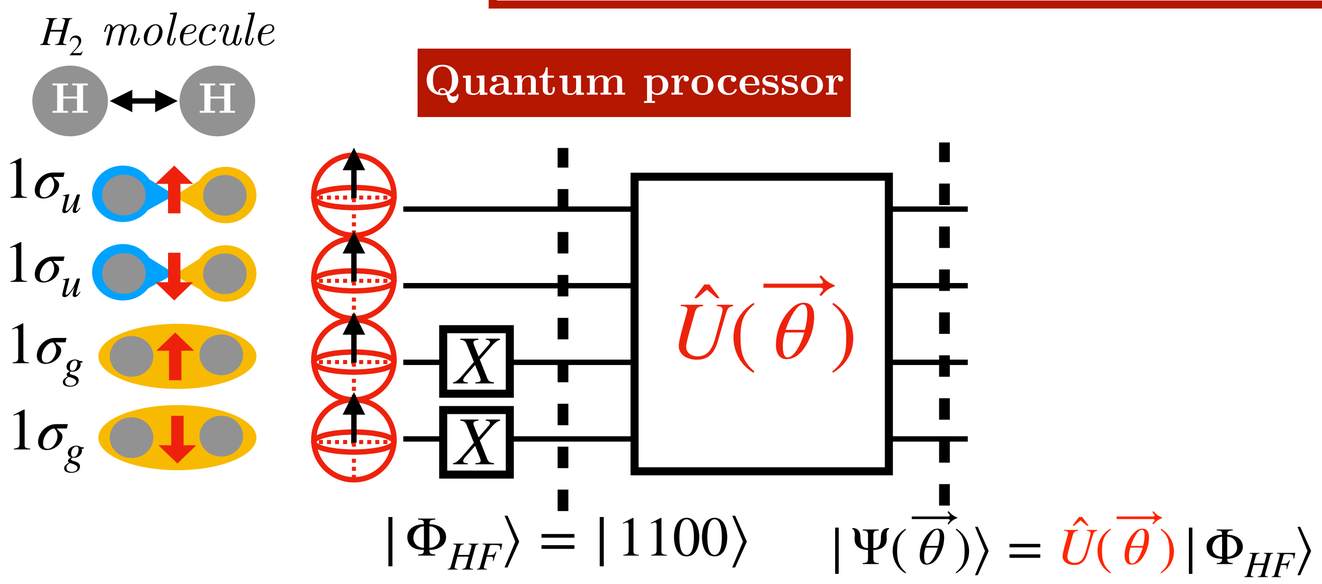

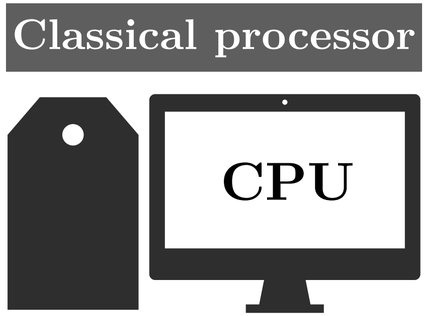

Classical Optimization of $\vec{\theta}$

Near term quantum algorithm

VARIATIONAL QUANTUM EIGENSOLVER (VQE)

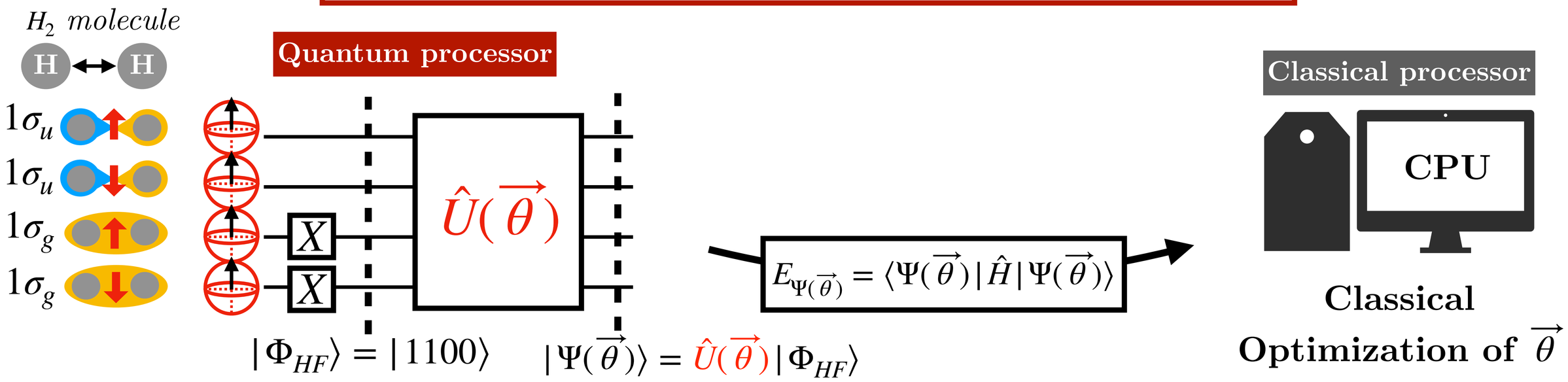

$|\Phi_{HF}\rangle = |1100\rangle$ $\quad$ $|\Psi(\vec{\theta})\rangle = \hat{U}(\vec{\theta})|\Phi_{HF}\rangle$

Near term quantum algorithm

VARIATIONAL QUANTUM EIGENSOLVER (VQE)

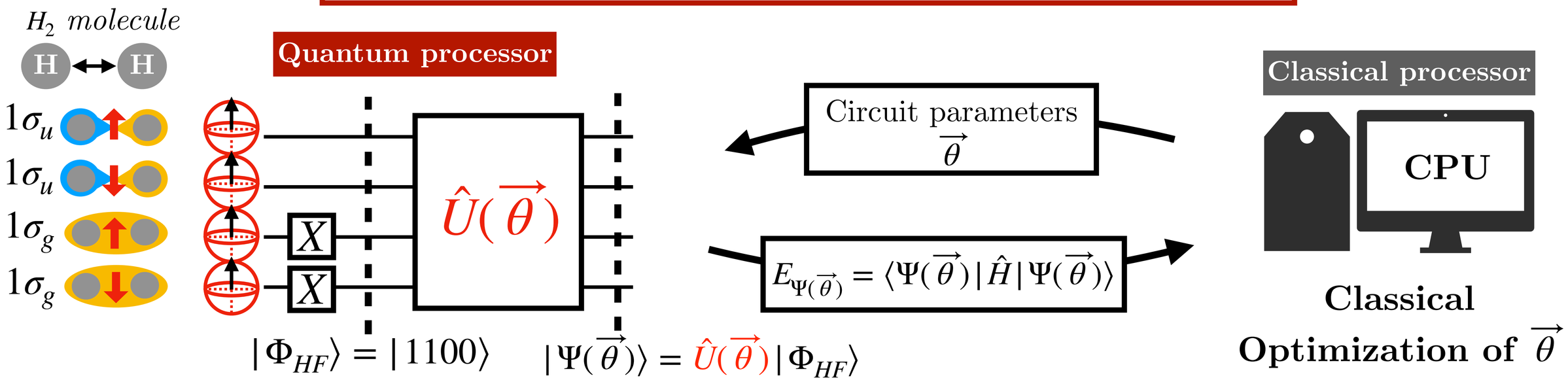

$|\Phi_{HF}\rangle = |1100\rangle$ $\quad$ $|\Psi(\vec{\theta})\rangle = \hat{U}(\vec{\theta})|\Phi_{HF}\rangle$

Near term quantum algorithm

VARIATIONAL QUANTUM EIGENSOLVER (VQE)

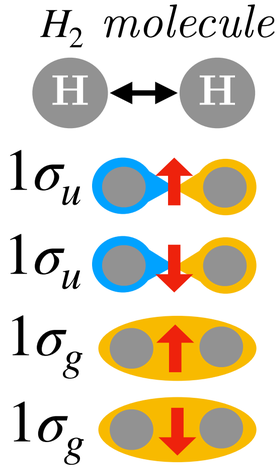

Quantum processor

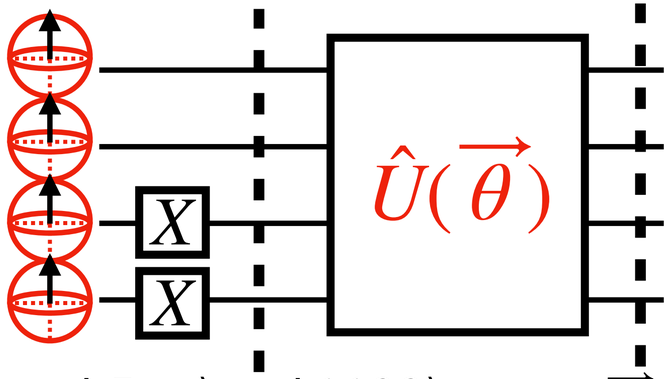

$|\Phi_{HF}\rangle = |1100\rangle$ $\quad |\Psi(\vec{\theta})\rangle = \hat{U}(\vec{\theta})|\Phi_{HF}\rangle$

Circuit parameters $\vec{\theta}$

$E_{\Psi(\vec{\theta})} = \langle\Psi(\vec{\theta})|\hat{H}|\Psi(\vec{\theta})\rangle$

Classical processor

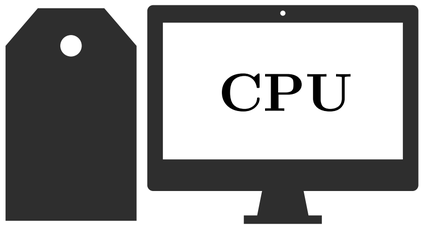

Classical Optimization of $\vec{\theta}$

Simulation of the VQE algorithm

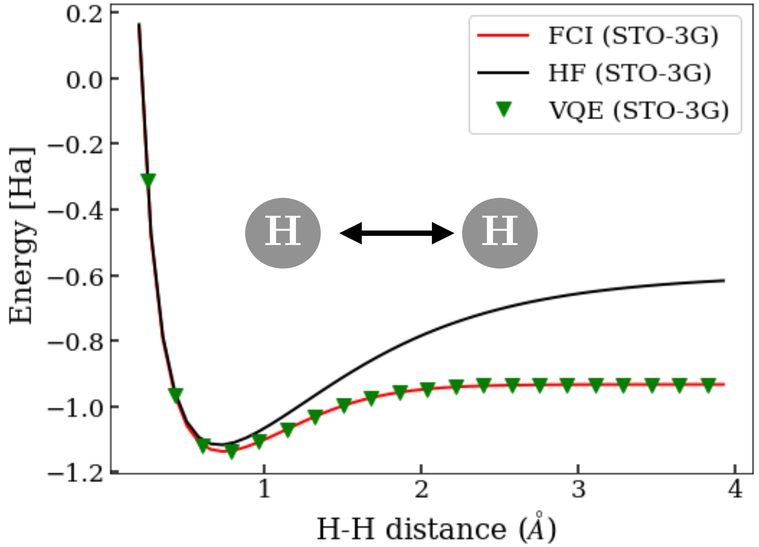

SA-OO-VQE: a quantum algorithm for photochemistry

Conical intersection:
A singular point of degeneracy connecting two Potential Energy Surfaces (PES)

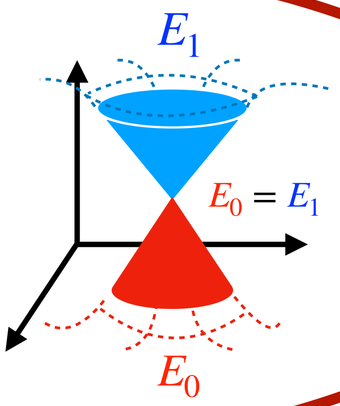

SA-OO-VQE: a quantum algorithm for photochemistry

Conical intersection:
A singular point of degeneracy connecting two Potential Energy Surfaces (PES)

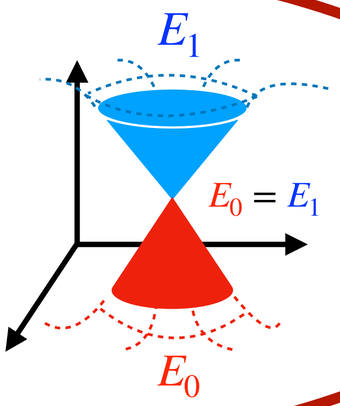

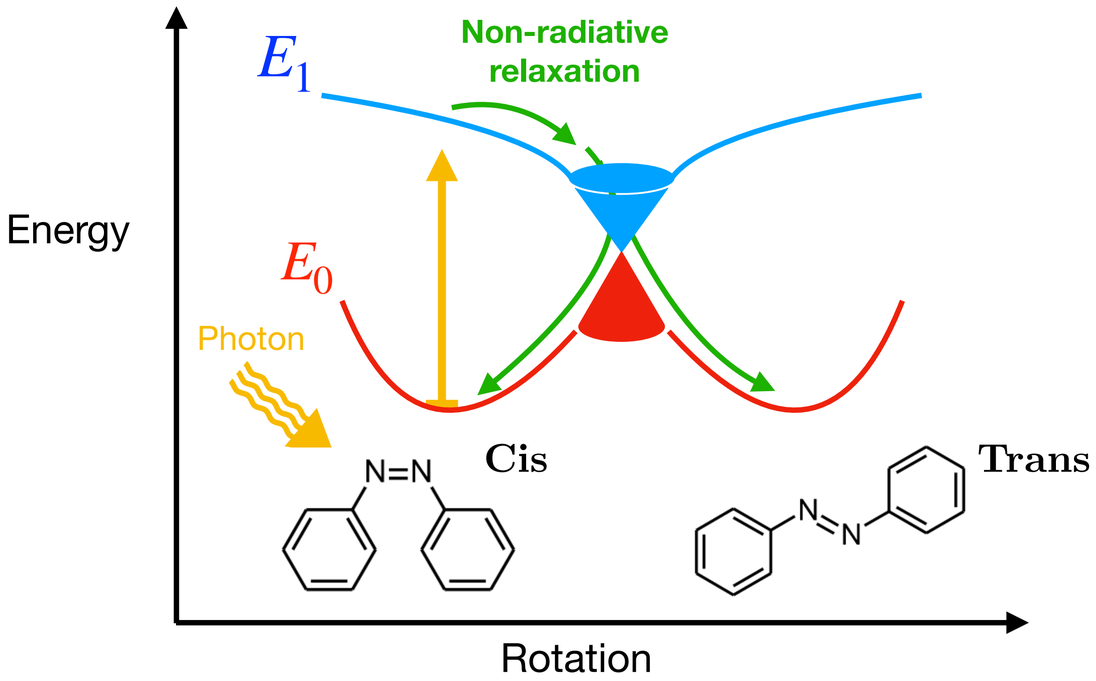

SA-OO-VQE: a quantum algorithm for photochemistry

Conical intersection:
A singular point of degeneracy connecting two Potential Energy Surfaces (PES)

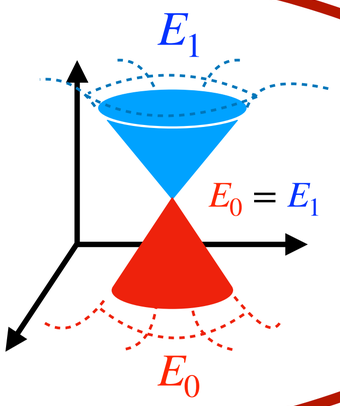

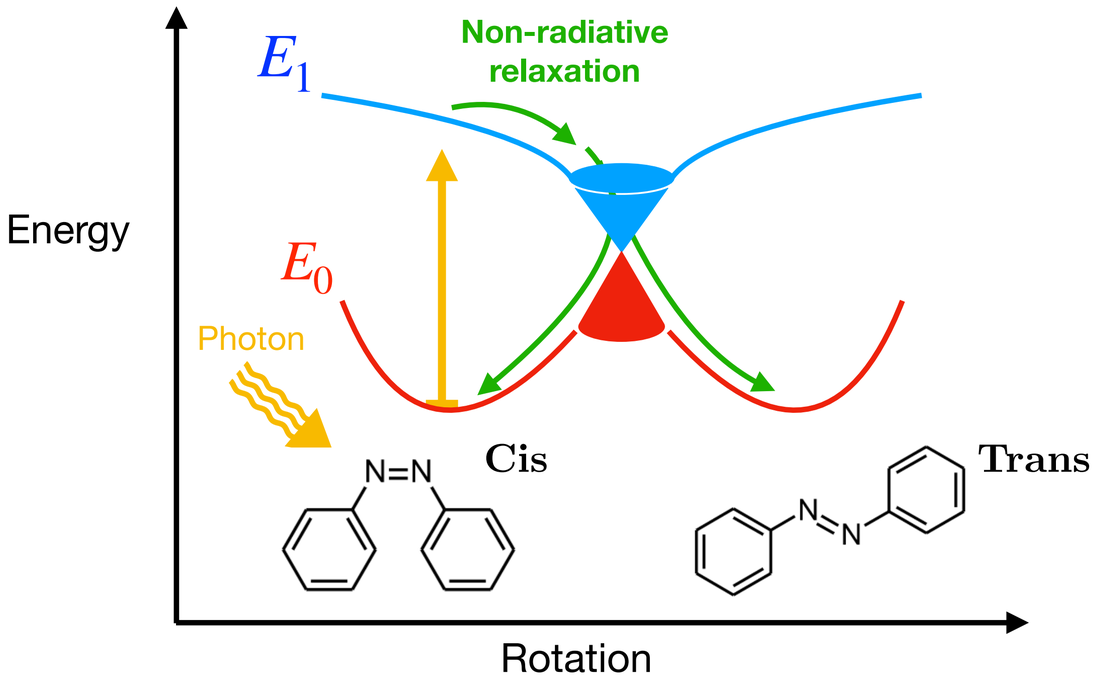

State-Averaged Orbital-Optimized VQE

SA-OO-VQE: a quantum algorithm for photochemistry

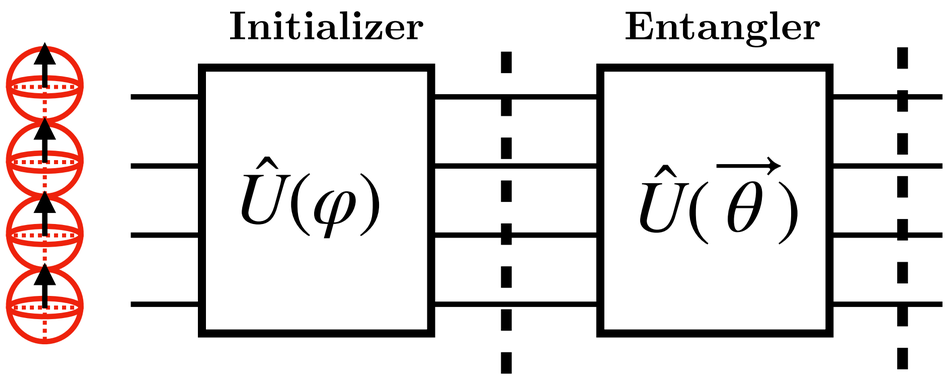

$\varphi = 0 \longrightarrow |\Phi_0\rangle$

Yalouz, Saad, et al. *Quantum Science and Technology* 6.2 (2021).
Yalouz, Saad, et al. *Journal of Chemical Theory and Computation* (2022).

SA-OO-VQE: a quantum algorithm for photochemistry

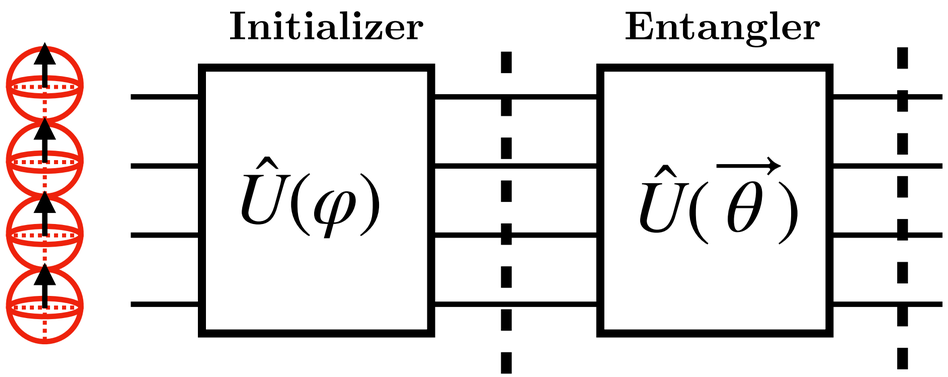

$\varphi = 0 \longrightarrow |\Phi_0\rangle$ $\qquad$ $|\Psi_0(\vec{\theta})\rangle = \hat{U}(\vec{\theta})|\Phi_0\rangle$

Yalouz, Saad, et al. *Quantum Science and Technology* 6.2 (2021).
Yalouz, Saad, et al. *Journal of Chemical Theory and Computation* (2022).

SA-OO-VQE: a quantum algorithm for photochemistry

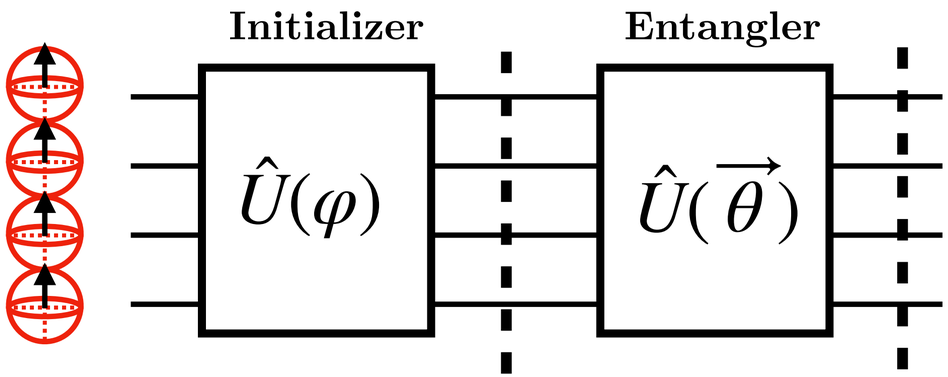

$\varphi = 0 \longrightarrow |\Phi_0\rangle$ $\quad |\Psi_0(\vec{\theta})\rangle = \hat{U}(\vec{\theta})|\Phi_0\rangle$ $\longrightarrow E_0(\vec{\theta})$

Yalouz, Saad, et al. *Quantum Science and Technology* 6.2 (2021).
Yalouz, Saad, et al. *Journal of Chemical Theory and Computation* (2022).

SA-OO-VQE: a quantum algorithm for photochemistry

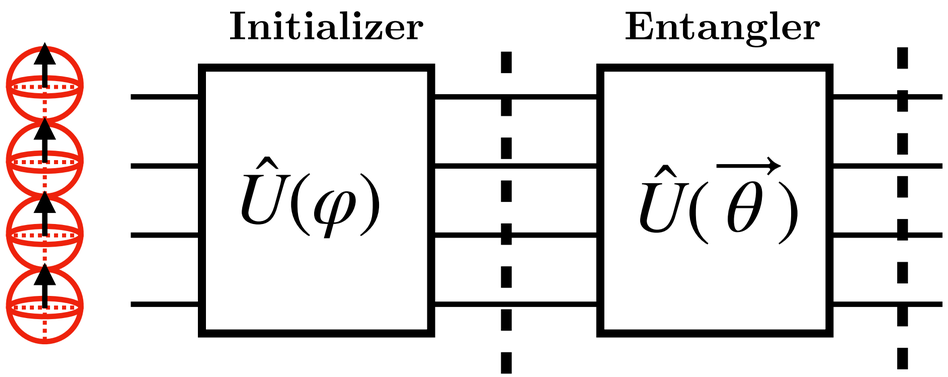

$E_0(\vec{\theta})$

$\varphi = 0 \longrightarrow |\Phi_0\rangle$ $\quad |\Psi_0(\vec{\theta})\rangle = \hat{U}(\vec{\theta})|\Phi_0\rangle$

$\varphi = \frac{\pi}{2} \longrightarrow |\Phi_1\rangle$

Yalouz, Saad, et al. *Quantum Science and Technology* 6.2 (2021).
Yalouz, Saad, et al. *Journal of Chemical Theory and Computation* (2022).

SA-OO-VQE: a quantum algorithm for photochemistry

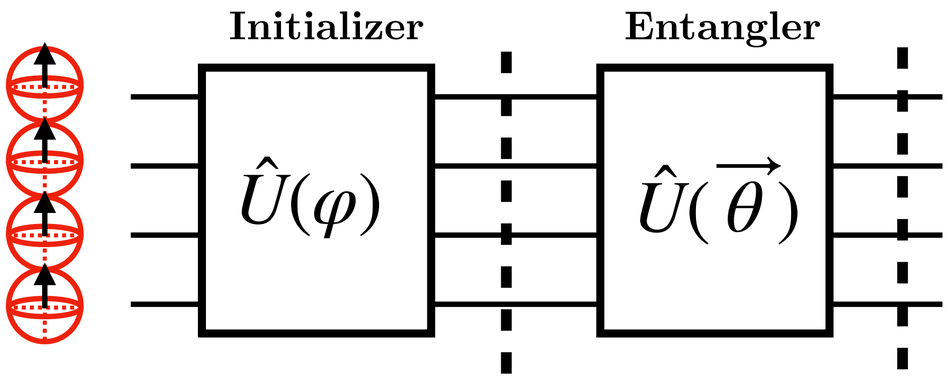

$$E_0(\vec{\theta})$$

$$\varphi = 0 \longrightarrow |\Phi_0\rangle \qquad |\Psi_0(\vec{\theta})\rangle = \hat{U}(\vec{\theta})|\Phi_0\rangle$$

$$\varphi = \frac{\pi}{2} \longrightarrow |\Phi_1\rangle \qquad |\Psi_1(\vec{\theta})\rangle = \hat{U}(\vec{\theta})|\Phi_1\rangle$$

Yalouz, Saad, et al. *Quantum Science and Technology* 6.2 (2021).
Yalouz, Saad, et al. *Journal of Chemical Theory and Computation* (2022).

SA-OO-VQE: a quantum algorithm for photochemistry

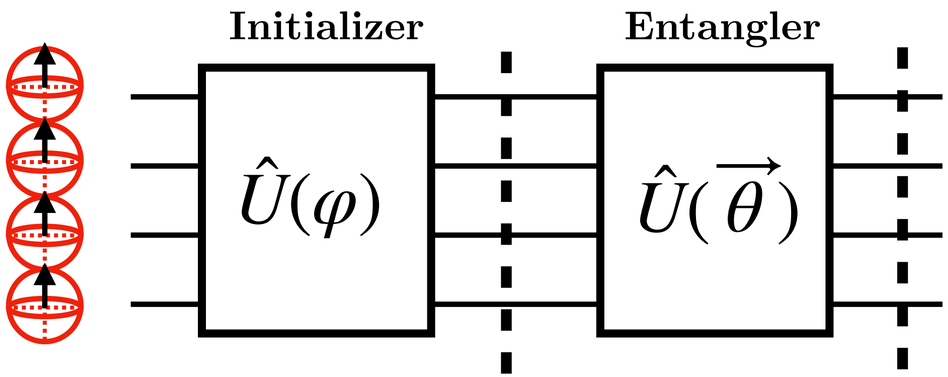

$$\varphi = 0 \longrightarrow |\Phi_0\rangle \qquad |\Psi_0(\vec{\theta})\rangle = \hat{U}(\vec{\theta})|\Phi_0\rangle$$

$$\varphi = \frac{\pi}{2} \longrightarrow |\Phi_1\rangle \qquad |\Psi_1(\vec{\theta})\rangle = \hat{U}(\vec{\theta})|\Phi_1\rangle$$

$$E_0(\vec{\theta}) + E_1(\vec{\theta})$$

Yalouz, Saad, et al. *Quantum Science and Technology* 6.2 (2021).
Yalouz, Saad, et al. *Journal of Chemical Theory and Computation* (2022).

SA-OO-VQE: a quantum algorithm for photochemistry

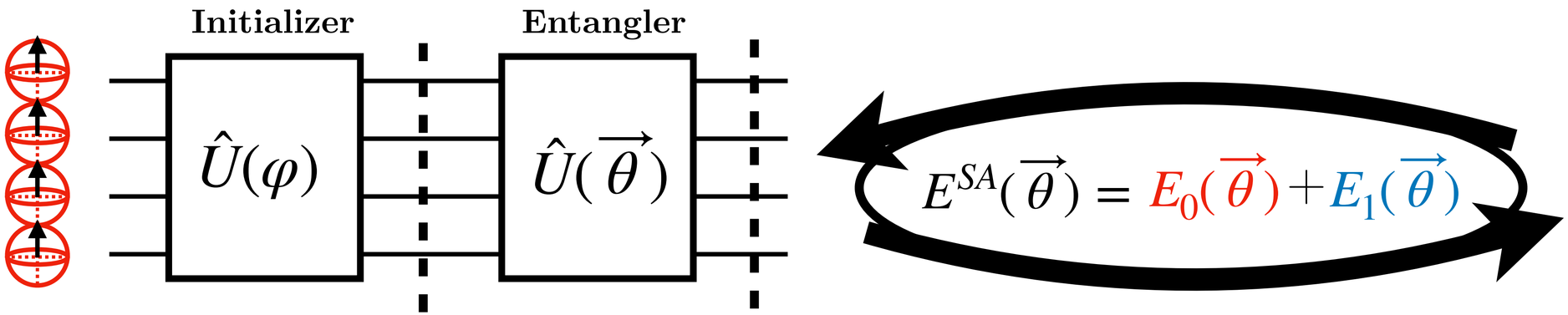

$\varphi = 0 \longrightarrow |\Phi_0\rangle \qquad |\Psi_0(\vec{\theta})\rangle = \hat{U}(\vec{\theta})|\Phi_0\rangle$

$\varphi = \frac{\pi}{2} \longrightarrow |\Phi_1\rangle \qquad |\Psi_1(\vec{\theta})\rangle = \hat{U}(\vec{\theta})|\Phi_1\rangle$

Yalouz, Saad, et al. *Quantum Science and Technology* 6.2 (2021).
Yalouz, Saad, et al. *Journal of Chemical Theory and Computation* (2022).

SA-OO-VQE: a quantum algorithm for photochemistry

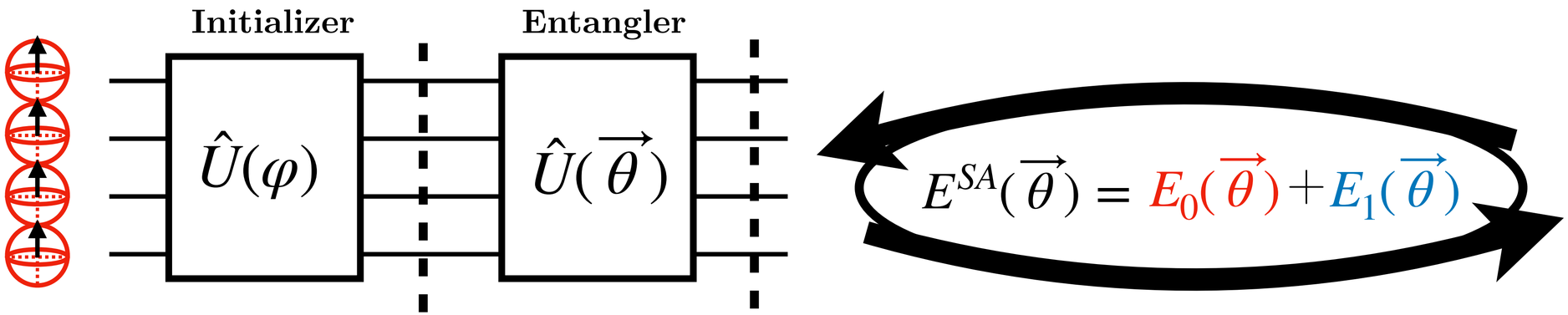

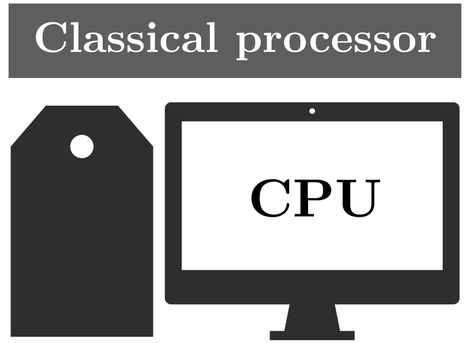

Optimization of $\vec{\theta}$
(+ SA orbital-Opt.)

$\varphi = 0 \longrightarrow |\Phi_0\rangle \qquad |\Psi_0(\vec{\theta})\rangle = \hat{U}(\vec{\theta})|\Phi_0\rangle$

$\varphi = \frac{\pi}{2} \longrightarrow |\Phi_1\rangle \qquad |\Psi_1(\vec{\theta})\rangle = \hat{U}(\vec{\theta})|\Phi_1\rangle$

Yalouz, Saad, et al. *Quantum Science and Technology* 6.2 (2021).
Yalouz, Saad, et al. *Journal of Chemical Theory and Computation* (2022).

SA-OO-VQE: a quantum algorithm for photochemistry

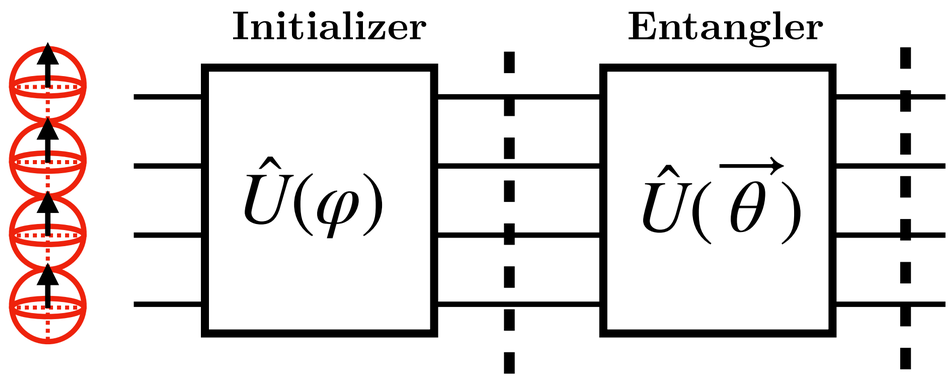

$$E^{SA}(\vec{\theta}) = E_0(\vec{\theta}) + E_1(\vec{\theta})$$

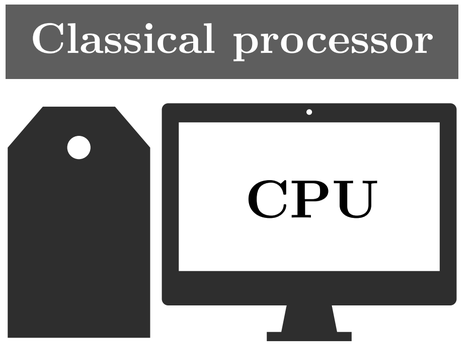

Optimization of $\vec{\theta}$
(+ SA orbital-Opt.)

$$\varphi = 0 \longrightarrow |\Phi_0\rangle \qquad |\Psi_0(\vec{\theta})\rangle = \hat{U}(\vec{\theta})|\Phi_0\rangle$$

$$\varphi = \frac{\pi}{2} \longrightarrow |\Phi_1\rangle \qquad |\Psi_1(\vec{\theta})\rangle = \hat{U}(\vec{\theta})|\Phi_1\rangle$$

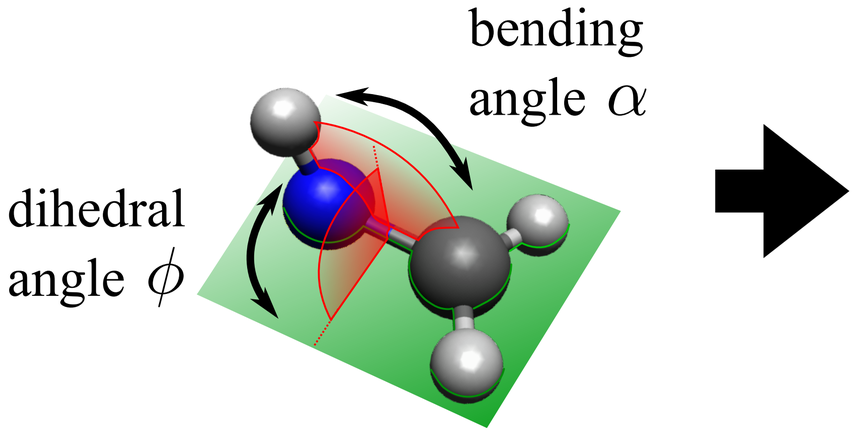

PES from SA-OO-VQE

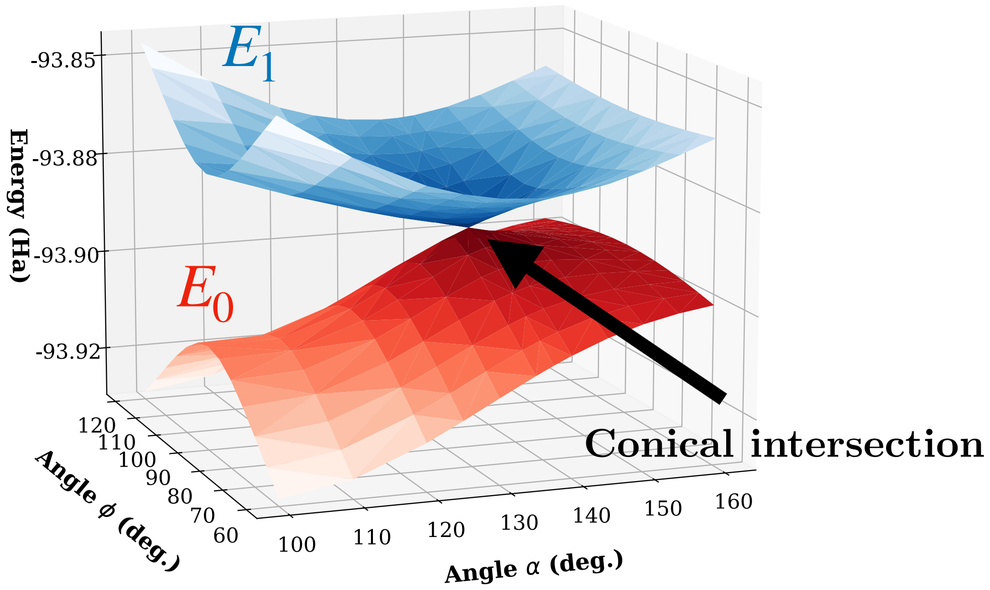

Yalouz, Saad, et al. *Quantum Science and Technology* 6.2 (2021).
Yalouz, Saad, et al. *Journal of Chemical Theory and Computation* (2022).

SA-OO-VQE: a quantum algorithm for photochemistry

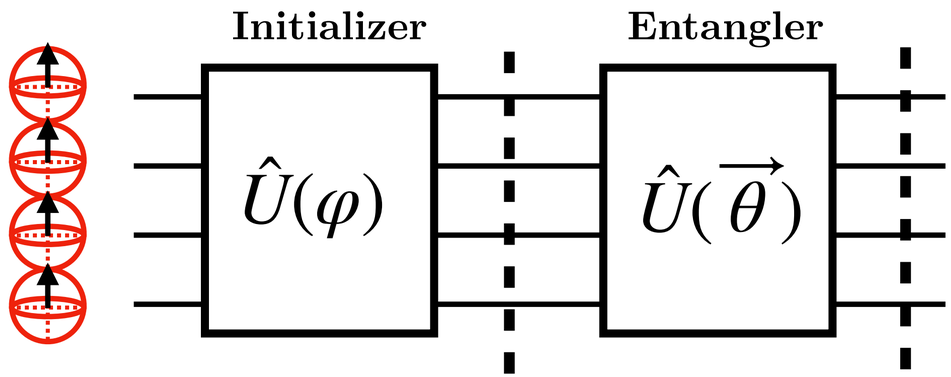

$$E^{SA}(\vec{\theta}) = E_0(\vec{\theta}) + E_1(\vec{\theta})$$

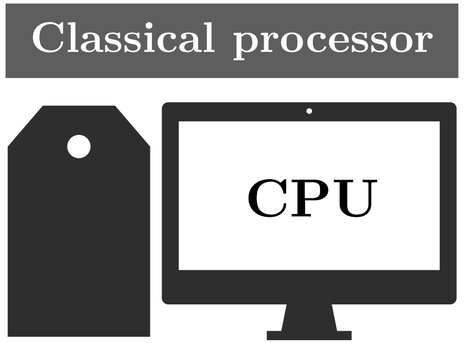

Optimization of $\vec{\theta}$
(+ SA orbital-Opt.)

$$\varphi = 0 \longrightarrow |\Phi_0\rangle \qquad |\Psi_0(\vec{\theta})\rangle = \hat{U}(\vec{\theta})|\Phi_0\rangle$$

$$\varphi = \frac{\pi}{2} \longrightarrow |\Phi_1\rangle \qquad |\Psi_1(\vec{\theta})\rangle = \hat{U}(\vec{\theta})|\Phi_1\rangle$$

Analytical derivatives

Molecular gradients

$$\frac{dE_I}{dR}$$

Non-adiabatic couplings

$$D_{IJ} = \langle \Psi_I | \frac{d}{dR} | \Psi_J \rangle$$

Yalouz, Saad, et al. *Quantum Science and Technology* 6.2 (2021).
Yalouz, Saad, et al. *Journal of Chemical Theory and Computation* (2022).

SA-OO-VQE: a quantum algorithm for photochemistry

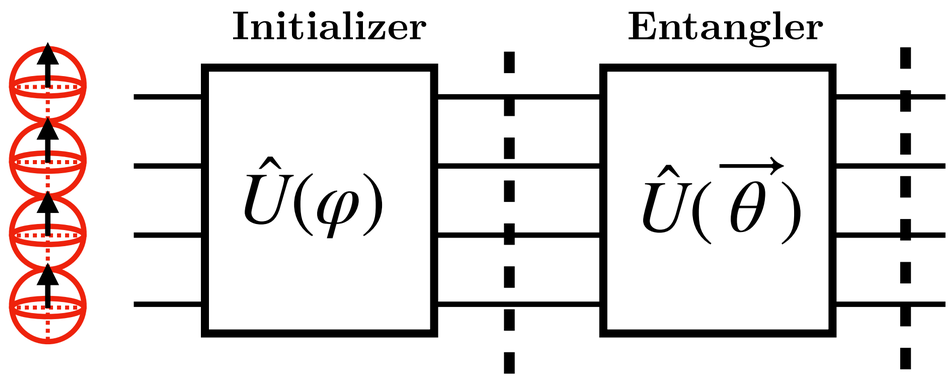

$$E^{SA}(\vec{\theta}) = E_0(\vec{\theta}) + E_1(\vec{\theta})$$

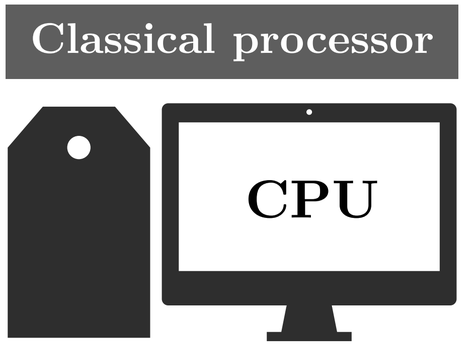

Optimization of $\vec{\theta}$
(+ SA orbital-Opt.)

$$\varphi = 0 \longrightarrow |\Phi_0\rangle \qquad |\Psi_0(\vec{\theta})\rangle = \hat{U}(\vec{\theta})|\Phi_0\rangle$$

$$\varphi = \frac{\pi}{2} \longrightarrow |\Phi_1\rangle \qquad |\Psi_1(\vec{\theta})\rangle = \hat{U}(\vec{\theta})|\Phi_1\rangle$$

Analytical derivatives

Molecular gradients

$$\frac{dE_I}{dR}$$

Non-adiabatic couplings

$$D_{IJ} = \langle \Psi_I | \frac{d}{dR} | \Psi_J \rangle$$

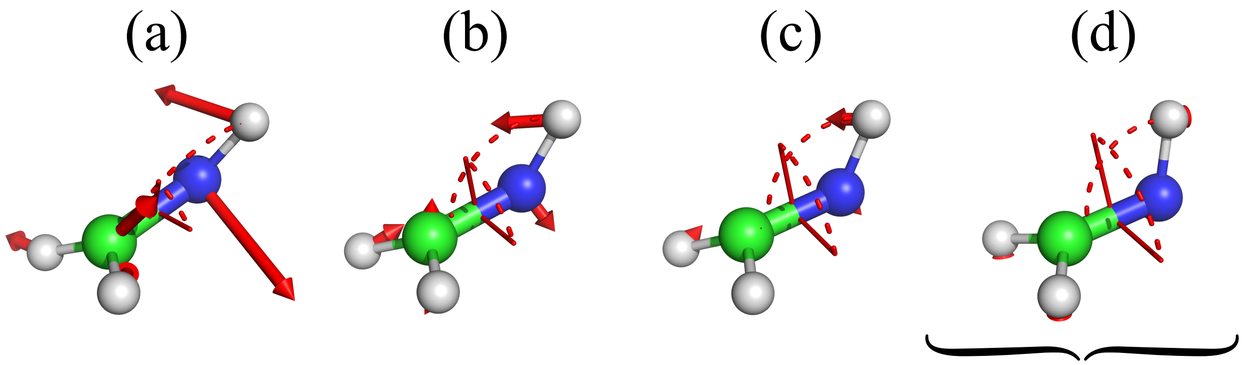

Minimal energy conical intersection geometry

Yalouz, Saad, et al. *Quantum Science and Technology* 6.2 (2021).
Yalouz, Saad, et al. *Journal of Chemical Theory and Computation* (2022).

SA-OO-VQE: a quantum algorithm for photochemistry

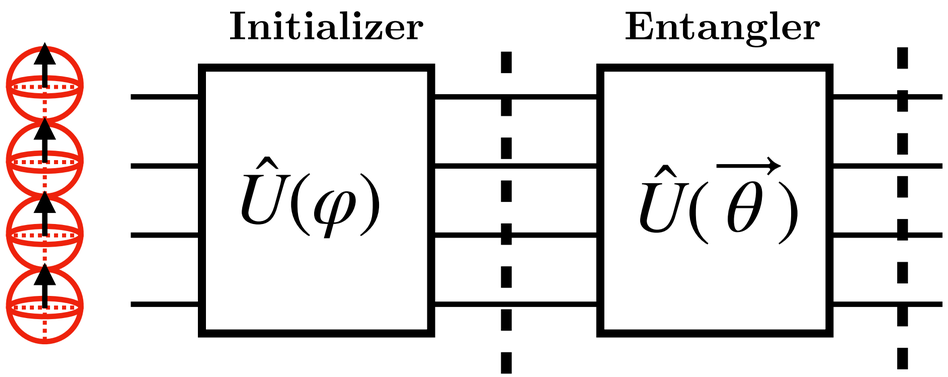

$$E^{SA}(\vec{\theta}) = E_0(\vec{\theta}) + E_1(\vec{\theta})$$

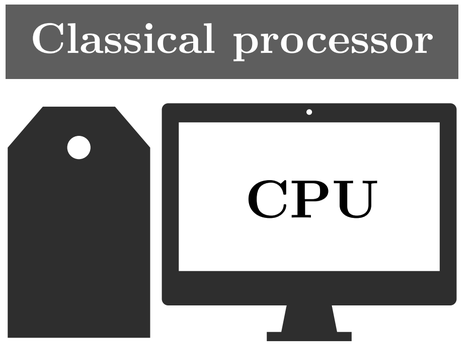

Optimization of $\vec{\theta}$
(+ SA orbital-Opt.)

$$\varphi = 0 \longrightarrow |\Phi_0\rangle \qquad |\Psi_0(\vec{\theta})\rangle = \hat{U}(\vec{\theta})|\Phi_0\rangle$$

$$\varphi = \frac{\pi}{2} \longrightarrow |\Phi_1\rangle \qquad |\Psi_1(\vec{\theta})\rangle = \hat{U}(\vec{\theta})|\Phi_1\rangle$$

Next steps:

1) **Switching to diabatic states**

2) **Extension to spin-orbit couplings ?**

Adiabatic basis

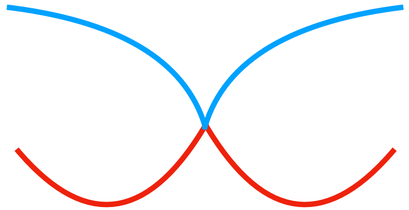

Diabatic basis

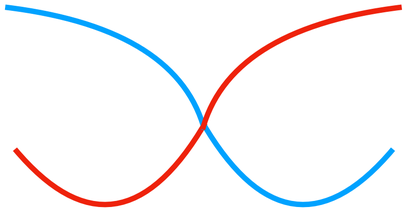

Yalouz, Saad, et al. *Quantum Science and Technology* 6.2 (2021).
Yalouz, Saad, et al. *Journal of Chemical Theory and Computation* (2022).

Thank you for your attention !

Thanks to my colleagues

Emiel Koridon, Benjamin Lasorne, Bruno Senjean,
Lucas Visscher and Thomas O'Brien

Yalouz, Saad, et al. *Quantum Science and Technology* 6.2 (2021).
Yalouz, Saad, et al. *Journal of Chemical Theory and Computation* (2022).

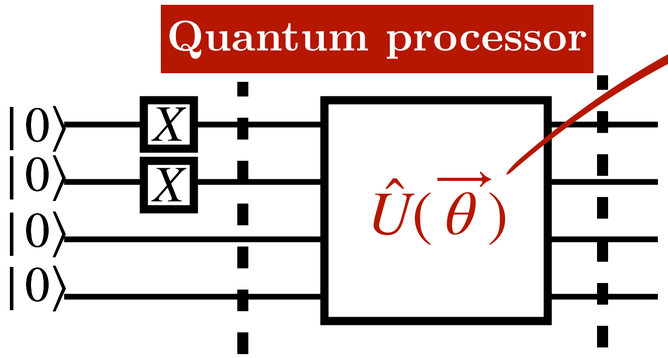

$|\Phi_{HF}\rangle = |1100\rangle \qquad |\Psi(\vec{\theta})\rangle = \hat{U}(\vec{\theta})|\Phi_{HF}\rangle$

Unitary coupled cluster ansatz

$$\hat{U}(\vec{\theta}) = e^{T(\vec{\theta})-T(\vec{\theta})^\dagger}$$

$$T(\vec{\theta}) = \sum_{a}^{virt}\sum_{i}^{occ}\theta_i^a a_a^\dagger a_i + \sum_{a>b}^{virt}\sum_{i>j}^{occ}\theta_{ij}^{ab} a_a^\dagger a_b^\dagger a_i a_j$$

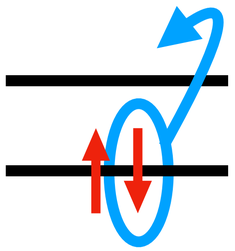

Jordan-Wigner transformation

$$\hat{U}(\vec{\theta}) \approx \prod_k e^{-i\theta_k \hat{\mathscr{P}}_k}$$

Where $\hat{\mathscr{P}}_k$ are "Pauli strings"

$$\hat{\mathscr{P}}_k = Z_1 \otimes X_2 \otimes \mathbf{1}_3 \otimes Y_4$$

Jordan-Wigner transformation

$$a_p \xrightarrow{JW} \frac{1}{2}(X_p + iY_p)\bigotimes_{q=0}^{p-1} Z_l$$

$$a_p^\dagger \xrightarrow{JW} \frac{1}{2}(X_p - iY_p)\bigotimes_{q=0}^{p-1} Z_q$$